Technical Description

ZOLLER
expect great measures

HAWK EYE®

Index

HPC Precision ER Collet Chuck HAWK EYE® 3

HSK-A 63 4

HSK-A 100 6

HSK-E 40 8

SK 40 ISO 7388-1Form AD/AF 10

SK 50 ISO 7388-1 Form AD/AF 12

BT 30 ISO 7388-2 JD 14

BT 40 ISO 7388-2 - Form JD / JF 16

BT 50 ISO 7388-2 Form JD / JF 18

Polygon shank taper CORUM 20

Accessories 22

TITANIUM 25

Recommended clamping torque 26

HPC Precision ER Collet Chuck HAWK EYE®

Go for precision in perfection and fully exploit the potential of your machine and tools: high-precision concentricity features, combined with high clamping forces, for highly efficient machining.

New: HAWK EYE® ER Collet Chuck «**Mini**» in the versions HSK-A 63 / HSK-E 40 / SK 40 / BT 30 and BT 40.

HAWK EYE® – Your benefits at a glance

The deep-seated collet inside the chuck guarantees:

- precise runout of cutting tool ≤ 3 µ at 2.5 x D*
- a significant increase of radial rigidity
- maximum contact in the body of the chuck and double clamping forces compared to a standard ER collet chuck

*When using the original ZOLLER collets.

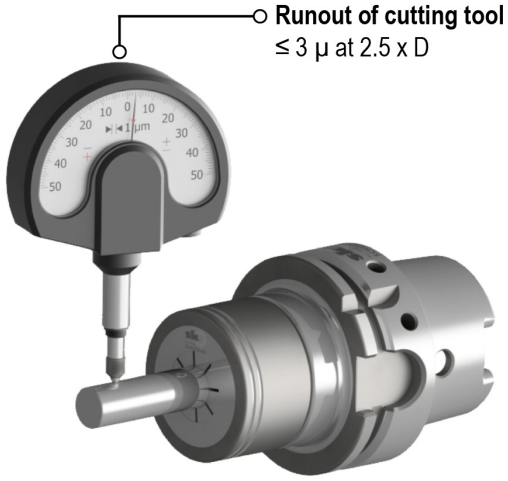

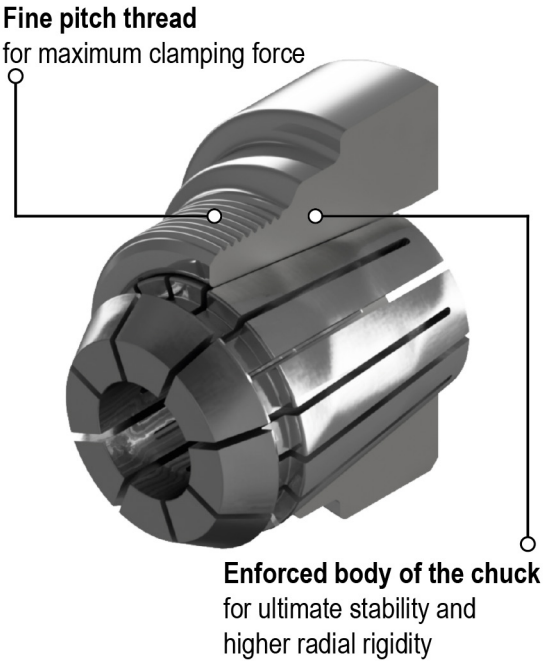

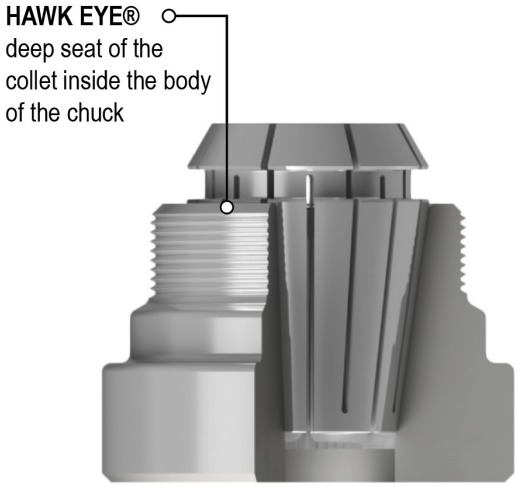

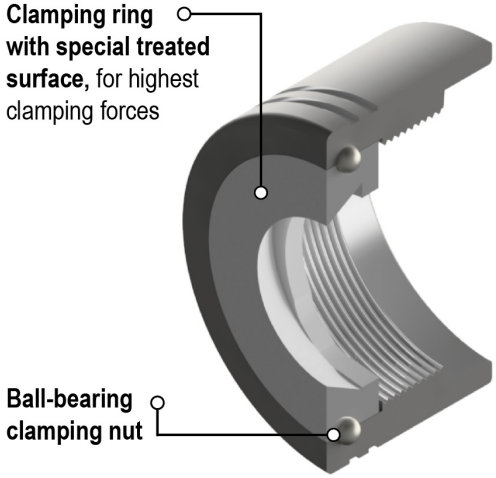

HSK-A 63

HPC Precision ER Collet Chuck HAWK EYE® / ER «Mini»

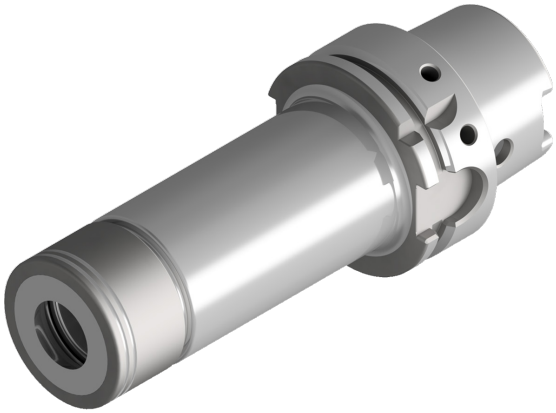

Figure: A = 130

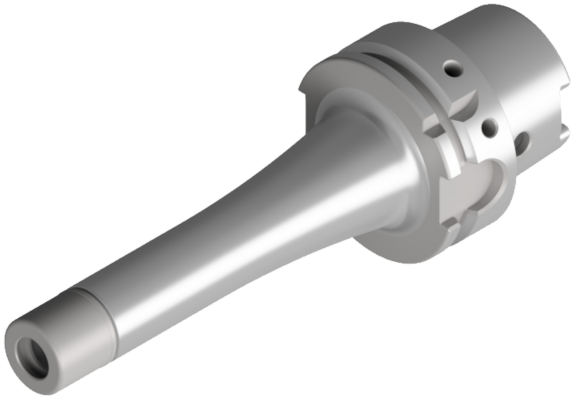

Figure: A = 160

Usage:

For clamping tools with cylindrical shank in ER collets.

Type:

Highly accurate taper tolerances of the ER inner taper and the collet taper achieve a runout accuracy of ≤ 3 µ at 2.5 D chucking length - when using our 2 µ collets. Due to the deep seat of the collet, the use of a ball bearing, and coated collet nut; the HAWK EYE collet chuck achieves more than twice the holding force compared to standard ER tool holders. In addition, the reinforced chuck body contributes to significantly higher radial rigidity. HAWK EYE can only clamp tool shanks with the nominal diameter of the collet.

Scope of delivery:

- With round clamping nut

Fine balanced:

G 2.5 at 25000 $^{min-1}$ or max. residual unbalance ≤ 1 gmm

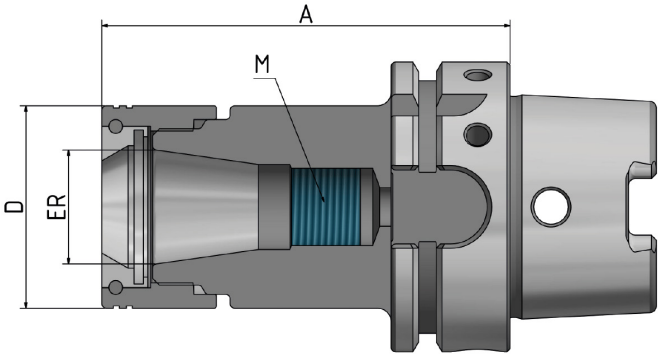

Order no.	HSK	ER	D	A	Clamping range	M	Version
ZT606332-002	63	16	34	75	1 - 10	-	Extra short
ZT606332-003	63	20	38	75	1 - 13	-	Extra short
ZT606332-004	63	25	44	75	1 - 16	-	Extra short
ZT606332-005	63	32	52	75	2 - 20	-	Extra short*
ZT606332-006	63	40	62	85	4 - 26	-	Extra short*
ZT606332-02	63	16	34	100	1 - 10	M11 x 1	Short
ZT606332-04	63	25	44	100	1 - 16	M18 x 1.5	Short
ZT606332-05	63	32	52	100	2 - 20	M24 x 1.5	Short
ZT606332-06	63	40	62	120	4 - 26	M28 x 1.5	Short
ZT606332-52	63	16	34	130	1 - 10	M11 x 1	Long
ZT606332-54	63	25	44	130	1 - 16	M18 x 1.5	Long
ZT606332-55	63	32	52	130	2 - 20	M24 x 1.5	Long
ZT606332-62	63	16	34	160	1 - 10	M11 x 1	Extra long
ZT606332-64	63	25	44	160	1 - 16	M18 x 1.5	Extra long
ZT606332-65	63	32	52	160	2 - 20	M24 x 1.5	Extra long

* When using the Titanium collet, the collet stop must be removed.

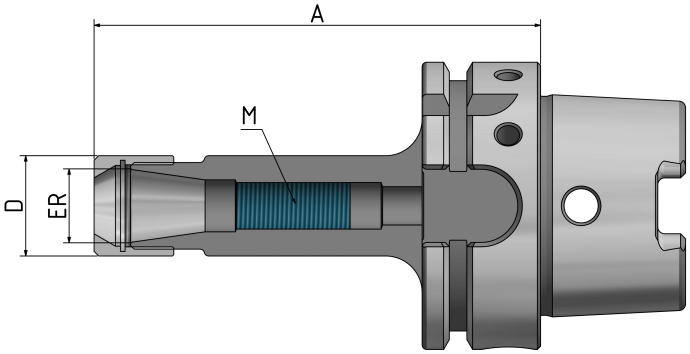

HPC Precision ER Collet Chuck HAWK EYE® «Mini»

Order no.	HSK	ER	D	A	Clamping range	M	Version
ZT606334-01	63	11	16	100	1 - 7	M8 x 1	Short
ZT606334-02	63	16	24	100	1 - 10	M11 x 1	Short
ZT606334-61	63	11	16	160	1 - 7	M8 x 1	Extra long
ZT606334-62	63	16	24	160	1 - 10	M11 x 1	Extra long

HSK-A 100

HPC Precision ER Collet Chuck HAWK EYE®

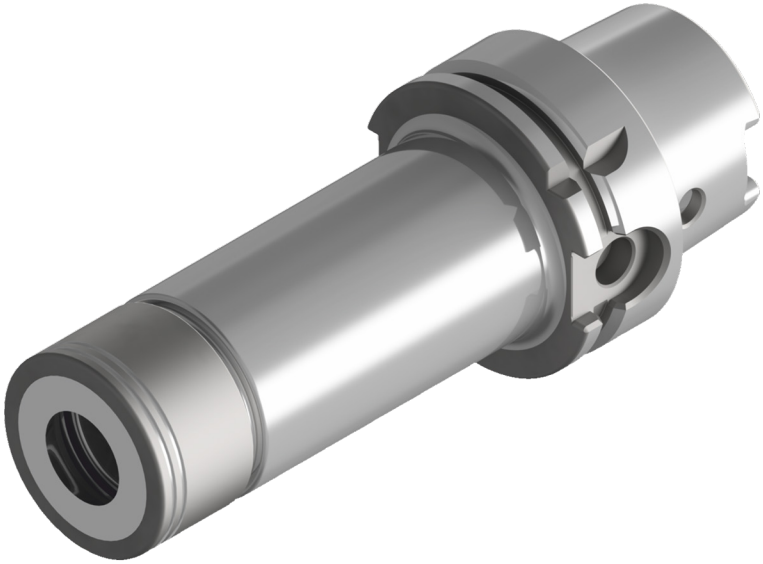

Figure: A = 130

Usage:

For clamping tools with cylindrical shank in ER collets.

Type:

- Highly accurate taper tolerances of the ER inner taper and the collet taper achieve a runout accuracy of ≤ 3 µ at 2.5 D chucking length - when using our 2 µ collets. Due to the deep seat of the collet, the use of a ball bearing, and coated collet nut; the HAWK EYE collet chuck achieves more than twice the holding force compared to standard ER tool holders. In addition, the reinforced chuck body contributes to significantly higher radial rigidity. HAWK EYE can only clamp tool shanks with the nominal diameter of the collet.

Scope of delivery:

- Round clamping nut

Fine balanced:

G 2.5 at 25000 $^{min-1}$ or max. residual unbalance ≤ 1 gmm

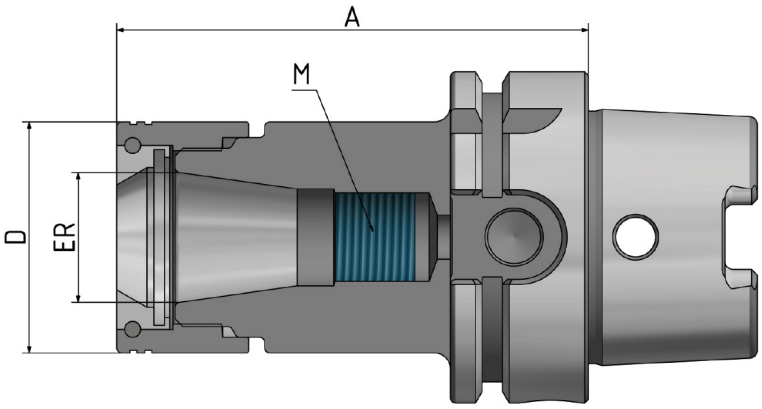

Order no.	HSK	ER	D	A	Clamping range	M	Version
ZT610032-002	100	16	34	75	1 - 10	-	Extra short
ZT610032-004	100	25	44	75	1 - 16	-	Extra short
ZT610032-005	100	32	52	75	2 - 20	-	Extra short
ZT610032-006	100	40	62	85	4 - 26	-	Extra short
ZT610032-02	100	16	34	100	1 - 10	M11 x 1	Short
ZT610032-04	100	25	44	100	1 - 16	M18 x 1.5	Short
ZT610032-05	100	32	52	100	2 - 20	M24 x 1.5	Short
ZT610032-06	100	40	62	120	4 - 26	M28 x 1.5	Short
ZT610032-52	100	16	34	130	1 - 10	M11 x 1	Long
ZT610032-54	100	25	44	130	1 - 16	M18 x 1.5	Long
ZT610032-55	100	32	52	130	2 - 20	M24 x 1.5	Long
ZT610032-56	100	40	62	130	4 - 26	M28 x 1.5	Long
ZT610032-62	100	16	34	160	1 - 10	M11 x 1	Extra Long
ZT610032-64	100	25	44	160	1 - 16	M18 x 1.5	Extra Long
ZT610032-65	100	32	52	160	2 - 20	M24 x 1.5	Extra Long
ZT610032-66	100	40	62	160	4 - 26	M28 x 1.5	Extra Long

HSK-E 40

HPC Precision ER Collet Chuck HAWK EYE® / ER «Mini»

Figure: A = 60

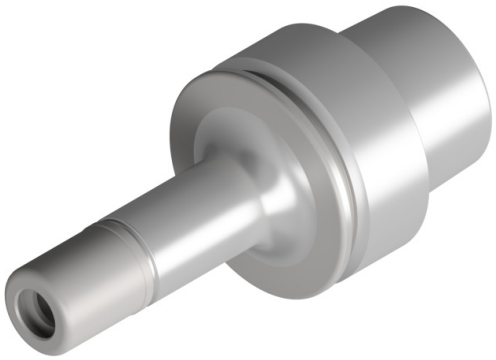

Figure: A = 70

Usage:

For clamping tools with cylindrical shank in ER collets.

Type:

- Concentricity deviation of the taper to the inner taper ≤ 0.003 mm.
- Precisely matched taper tolerances of the ER inner taper and the collet taper achieve a concentricity of ≤ 8 µ at 2.5 x D unclamping length.

Scope of delivery:

- Clamping nut

Fine balanced:

G 2.5 at 25000 $^{min-1}$ or max. residual unbalance ≤ 1 gmm

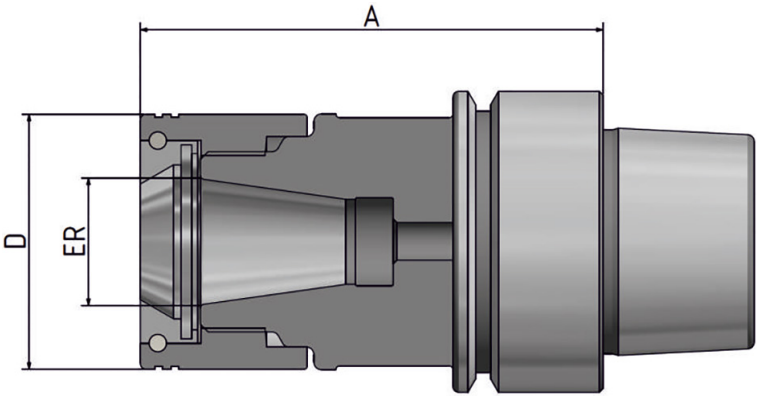

Order no.	HSK	ER	D	A	Clamping range	M
ZT404032-02	40	16	34	60	1 - 10	-
ZT404032-04	40	25	44	65	1 - 16	-

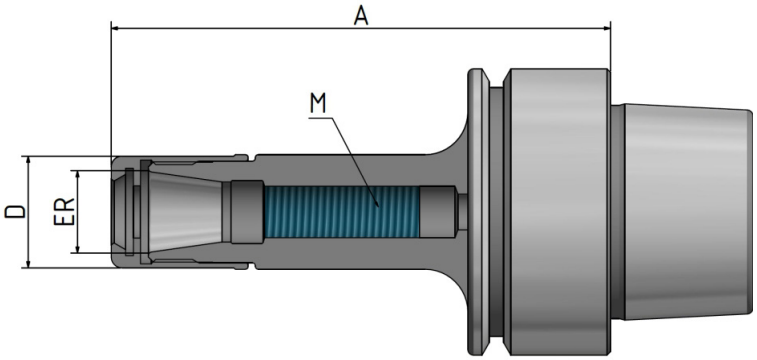

HPC Precision ER Collet Chuck HAWK EYE® «Mini»

Order no.	HSK	ER	D	A	Clamping range	M
ZT404034-001	40	11	16	70	1 - 7	M8 x 1
ZT404034-002	40	16	24	70	1 - 10	M11 x 1

SK 40 ISO 7388-1Form AD/AF

HPC Precision ER Collet Chuck HAWK EYE® / ER «Mini»

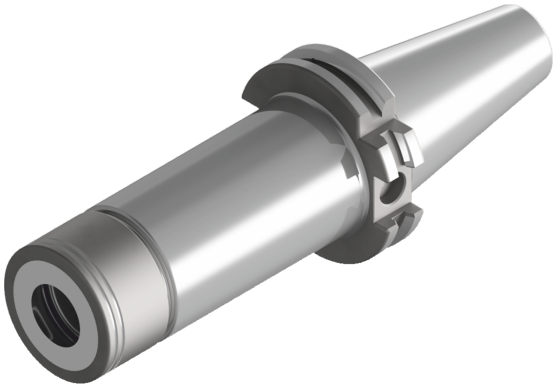

Figure: A = 160

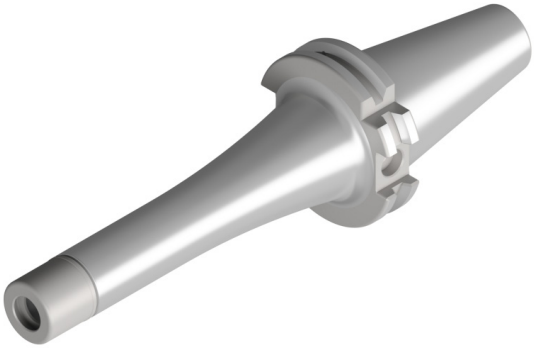

Figure: A = 160

Usage:

For clamping tools with cylindrical shank in ER collets.

Type:

Highly accurate taper tolerances of the ER inner taper and the collet taper achieve a runout accuracy of ≤ 3 µ at 2.5 D chucking length - when using our 2 µ collets. Due to the deep seat of the collet, the use of a ball bearing, and coated collet nut; the HAWK EYE collet chuck achieves more than twice the holding force compared to standard ER tool holders. In addition, the reinforced chuck body contributes to significantly higher radial rigidity. HAWK EYE can only clamp tool shanks with the nominal diameter of the collet.

Scope of delivery:

- Round clamping nut

Fine balanced:

G 2.5 at 25000 $^{min-1}$ or max. residual unbalance ≤ 1 gmm

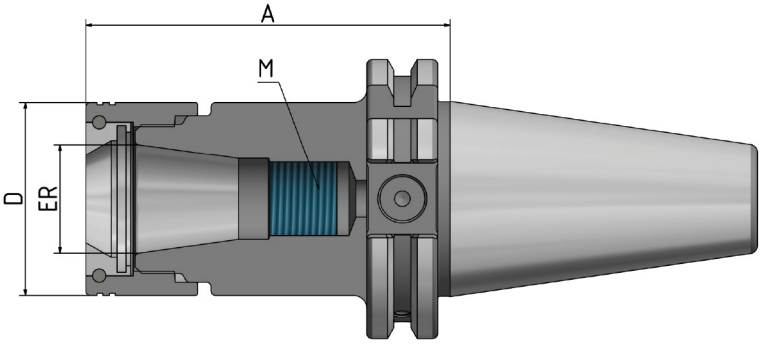

Order no.	SK	ER	Clamping range	A	D	M	Version
ZT714032-02	40	16	1 - 10	70	34	M11 x 1	Short
ZT714032-03	40	20	1 - 13	70	38	M14 x 1	Short
ZT714032-04	40	25	1 - 16	70	44	M18 x 1,5	Short
ZT714032-05	40	32	2 - 20	70	52	M24 x 1,5	Short
ZT714032-06	40	40	4 - 26	70	62	M28 x 1,5	Short
ZT714032-32	40	16	1 - 10	100	34	M11 x 1	Long
ZT714032-34	40	25	1 - 16	100	44	M18 x 1,5	Long
ZT714032-35	40	32	2 - 20	100	52	M24 x 1,5	Long
ZT714032-36	40	40	4 - 26	100	62	M28 x 1,5	Long
ZT714032-52	40	16	1 - 10	130	34	M11 x 1	Long
ZT714032-54	40	25	1 - 16	130	44	M18 x 1,5	Long
ZT714032-55	40	32	2 - 20	130	52	M24 x 1,5	Long
ZT714032-62	40	16	1 - 10	160	34	M11 x 1	Extra long
ZT714032-64	40	25	1 - 16	160	44	M18 x 1,5	Extra long
ZT714032-65	40	32	2 - 20	160	52	M24 x 1,5	Extra long

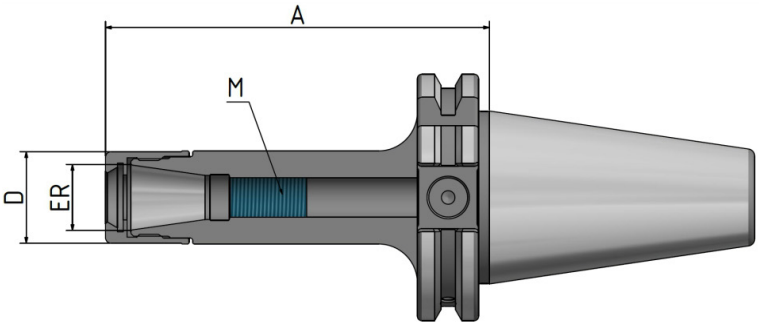

HPC Precision ER Collet Chuck HAWK EYE® «Mini»

Order no.	SK	ER	Clamping range	A	D	M	Version
ZT714034-31	40	11	1 - 10	100	16	M8 x 1	Short
ZT714034-32	40	16	1 - 16	100	24	M11 x 1	Short
ZT714034-61	40	11	2 - 20	160	16	M8 x 1	Extra long
ZT714034-62	40	16	4 - 26	160	24	M11 x 1	Extra long

SK 50 ISO 7388-1 Form AD/AF

HPC Precision ER Collet Chuck HAWK EYE®

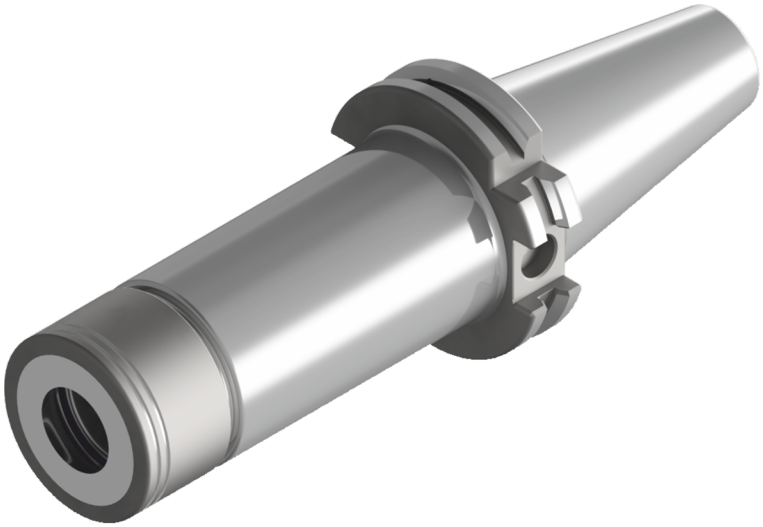

Figure: A = 160

Usage:

For clamping tools with cylindrical shank in ER collets.

Type:

Highly accurate taper tolerances of the ER inner taper and the collet taper achieve a runout accuracy of ⩽ 3 µ at 2.5 D chucking length - when using our 2 µ collets. Due to the deep seat of the collet, the use of a ball bearing, and coated collet nut; the HAWK EYE collet chuck achieves more than twice the holding force compared to standard ER tool holders. In addition, the reinforced chuck body contributes to significantly higher radial rigidity. HAWK EYE can only clamp tool shanks with the nominal diameter of the collet.

Scope of delivery:

- Round clamping nut

Fine balanced:

G 2.5 at 25000 $^{min-1}$ or max. residual unbalance ≤ 1 gmm

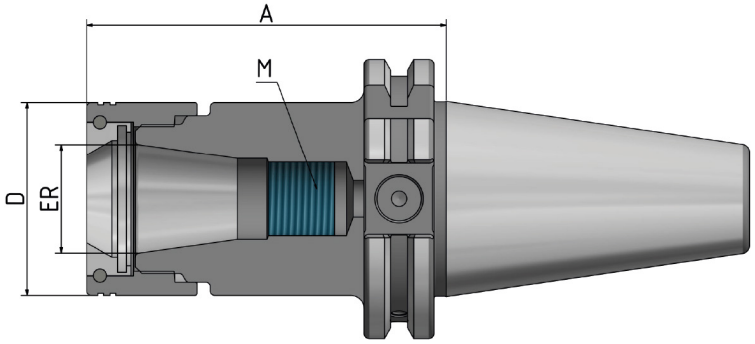

Order no.	SK	ER	Clamping range	A	D	M	Version
ZT715032-04	50	25	1 - 16	70	44	M18 x 1,5	Short
ZT715032-05	50	32	2 - 20	70	52	M24 x 1,5	Short
ZT715032-06	50	40	4 - 26	70	62	M28 x 1,5	Short
ZT715032-34	50	25	1 - 16	100	44	M18 x 1,5	Long
ZT715032-35	50	32	2 - 20	100	52	M24 x 1,5	Long
ZT715032-36	50	40	4 - 26	100	62	M28 x 1,5	Long
ZT715032-54	50	25	1 - 16	130	44	M18 x 1,5	Long
ZT715032-55	50	32	2 - 20	130	52	M24 x 1,5	Long
ZT715032-56	50	40	4 - 26	130	62	M28 x 1,5	Long
ZT715032-64	50	25	1 - 16	160	44	M18 x 1,5	Extra Long
ZT715032-65	50	32	2 - 20	160	52	M24 x 1,5	Extra Long
ZT715032-66	50	40	4 - 26	160	62	M28 x 1,5	Extra Long

BT 30 ISO 7388-2 JD

HPC Precision ER Collet Chuck HAWK EYE® / ER «Mini»

Figure: A = 60

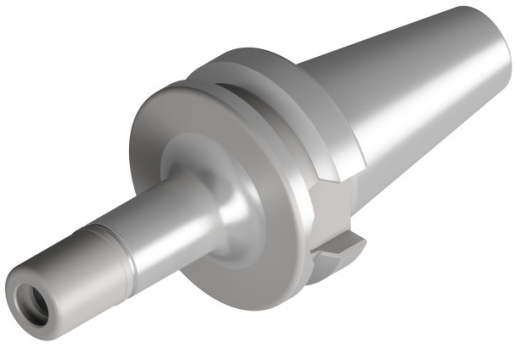

Figure: A = 70

Usage:

For clamping tools with cylindrical shank in ER collets.

Type:

Highly accurate taper tolerances of the ER inner taper and the collet taper achieve a runout accuracy of ⩽ 3 µ at 2.5 D chucking length - when using our 2 µ collets. Due to the deep seat of the collet, the use of a ball bearing, and coated collet nut; the HAWK EYE collet chuck achieves more than twice the holding force compared to standard ER tool holders. In addition, the reinforced chuck body contributes to significantly higher radial rigidity. HAWK EYE can only clamp tool shanks with the nominal diameter of the collet.

Scope of delivery:

- Round clamping nut

Fine balanced:

G 2.5 at 25000 $^{min-1}$ or max. residual unbalance ≤ 1 gmm

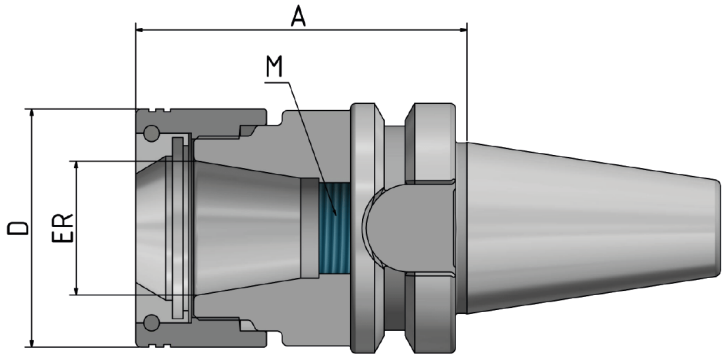

Order no.	BT	ER	D	A	Clamping range	M	Version
ZT753032-02	30	16	34	60	1 - 10	M11 x 1	Extra short
ZT753032-04	30	25	44	60	1 - 16	M18 x 1.5	Extra short

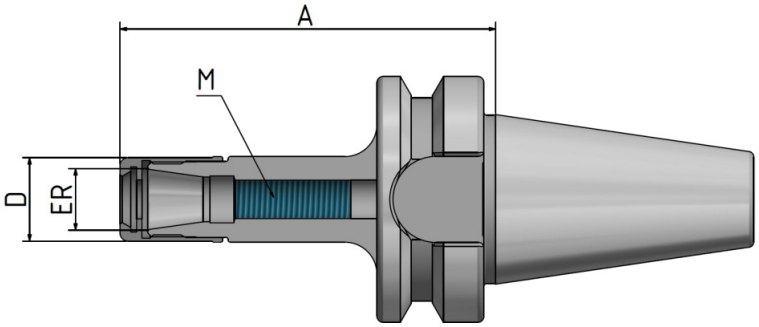

HPC Precision ER Collet Chuck HAWK EYE® «Mini»

Order no.	BT	ER	D	A	Clamping range	M	Version
ZT753034-01	30	11	16	70	1 - 7	M8 x 1	Short
ZT753034-02	30	16	24	70	1 - 10	M1 1x 1	Short

BT 40 ISO 7388-2 - Form JD / JF

HPC Precision ER Collet Chuck HAWK EYE® / ER «Mini»

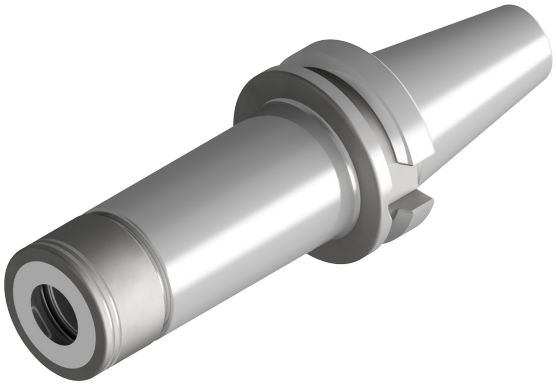

Figure: A = 160

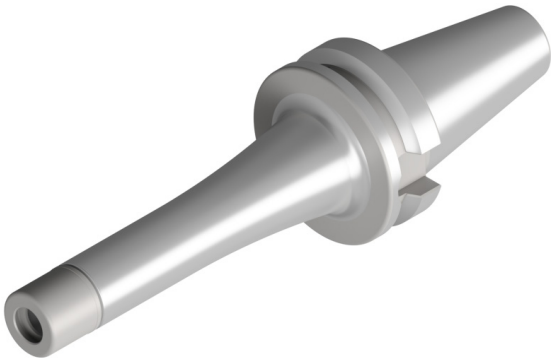

Figure: A = 160

Usage:

For clamping tools with cylindrical shank in ER collets

Type:

Highly accurate taper tolerances of the ER inner taper and the collet taper achieve a runout accuracy of ≤ 3 µ at 2.5 D chucking length - when using our 2 µ collets. Due to the deep seat of the collet, the use of a ball bearing, and coated collet nut; the HAWK EYE collet chuck achieves more than twice the holding force compared to standard ER tool holders. In addition, the reinforced chuck body contributes to significantly higher radial rigidity. HAWK EYE can only clamp tool shanks with the nominal diameter of the collet.

Scope of delivery:

- Round clamping nut

Fine balanced:

G 2.5 at 25000 $^{min-1}$ or max. residual unbalance ≤ 1 gmm

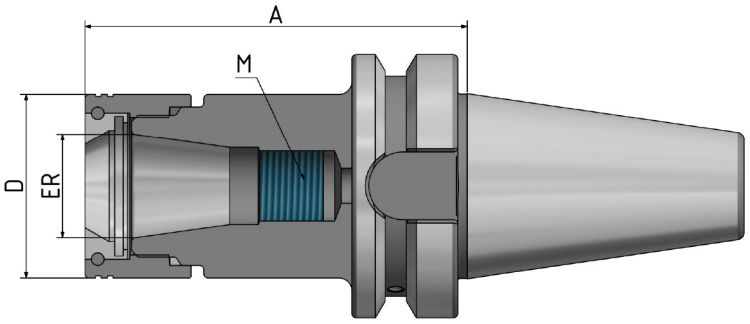

Order no.	BT	ER	D	A	Clamping range	M	Version
ZT754032-02	40	16	34	70	1 - 10	M11 x 1	Short
ZT754032-03	40	20	38	70	1 - 13	M18 x 1	Short
ZT754032-04	40	25	44	70	1 - 16	M18 x 1.5	Short
ZT754032-05	40	32	52	70	2 - 20	M24 x 1,5	Short
ZT754032-06	40	40	62	70	4 - 26	M28 x 1.5	Short
ZT754032-32	40	16	34	100	1 - 10	M11 x 1	Long
ZT754032-34	40	25	44	100	1 - 16	M18 x 1.5	Long
ZT754032-35	40	32	52	100	2 - 20	M24 x 1.5	Long
ZT754032-36	40	40	62	100	4 - 26	M28 x 1.5	Long
ZT754032-52	40	16	34	130	1 - 10	M11 x 1	Long
ZT754032-54	40	25	44	130	1 - 16	M18 x 1.5	Long
ZT754032-55	40	32	52	130	2 - 20	M24 x 1.5	Long
ZT754032-62	40	16	34	160	1 - 10	M11 x 1	Extra long
ZT754032-64	40	25	44	160	1 - 16	M18 x 1.5	Extra long
ZT754032-65	40	32	52	160	2 - 20	M24 x 1.5	Extra long

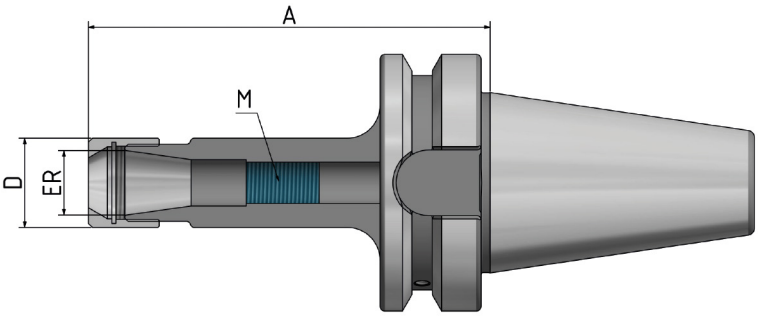

HPC Precision ER Collet Chuck HAWK EYE® «Mini»

Order no.	BT	ER	D	A	Clamping range	M	Version
ZT754034-31	40	11	16	100	1 - 7	M8 x 1	Short
ZT754034-32	40	16	24	100	1 - 10	M11 x 1	Short
ZT754034-61	40	11	16	100	1 - 7	M8 x 1	Extra long
ZT754034-62	40	16	24	100	1 - 10	M11 x 1	Extra long

BT 50 ISO 7388-2 Form JD / JF

HPC Precision ER Collet Chuck HAWK EYE®.

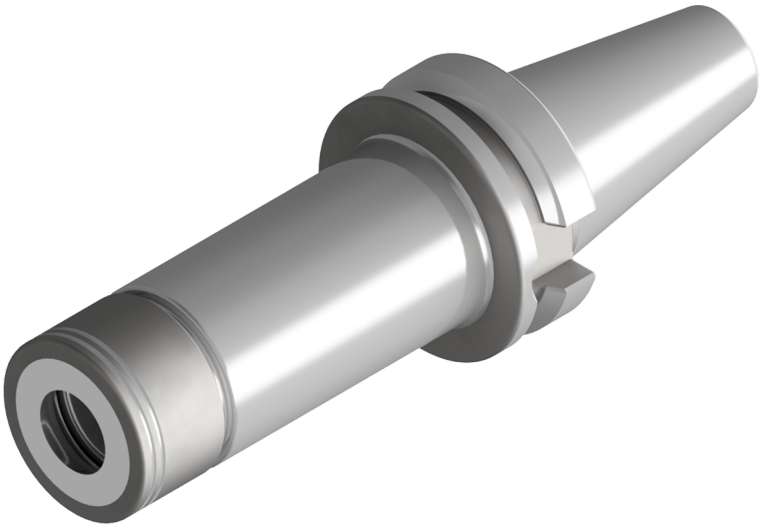

Figure: A = 160

Usage:

For clamping tools with cylindrical shank in ER collets.

Type:

Highly accurate taper tolerances of the ER inner taper and the collet taper achieve a runout accuracy of ≤ 3 µ at 2.5 D chucking length - when using our 2 µ collets. Due to the deep seat of the collet, the use of a ball bearing, and coated collet nut; the HAWK EYE collet chuck achieves more than twice the holding force compared to standard ER tool holders. In addition, the reinforced chuck body contributes to significantly higher radial rigidity. HAWK EYE can only clamp tool shanks with the nominal diameter of the collet.

Scope of delivery:

- Round clamping nut

Fine balanced:

G 2.5 at 25000 $^{min-1}$ or max. residual unbalance ≤ 1 gmm

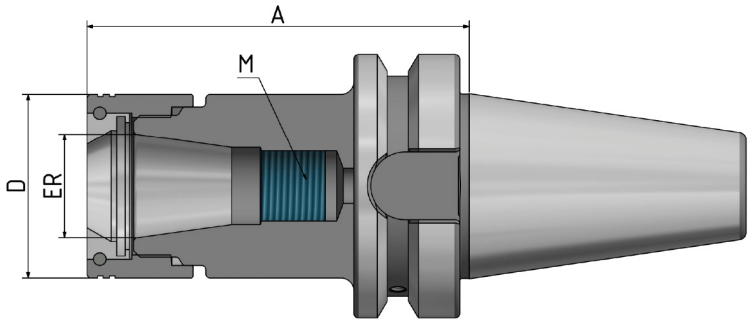

Order no.	BT	ER	D	A	Clamping range	Version
ZT755032-04	50	25	44	70	1 - 16	Short
ZT755032-05	50	32	52	70	2 - 20	Short
ZT755032-06	50	40	62	80	4 - 26	Short
ZT755032-34	50	25	44	100	1 - 16	Long
ZT755032-35	50	32	52	100	2 - 20	Long
ZT755032-36	50	40	62	100	4 - 26	Long
ZT755032-54	50	25	44	130	1 - 16	Long
ZT755032-55	50	32	52	130	2 - 20	Long
ZT755032-56	50	40	62	130	4 - 26	Long
ZT755032-64	50	25	44	160	1 - 16	Extra Long
ZT755032-65	50	32	52	160	2 - 20	Extra Long
ZT755032-66	50	40	62	160	4 - 26	Extra Long

Polygon shank taper CORUM

HPC Precision ER Collet Chuck HAWK EYE®.

Figure: A = 100

Usage:

For clamping tools with cylindrical shank in ER collets.

Type:

- Highly accurate taper tolerances of the ER inner taper and the collet taper achieve a runout accuracy of ≤ 3 µ at 2.5 D chucking length - when using our 2 µ collets. Due to the deep seat of the collet, the use of a ball bearing, and coated collet nut; the HAWK EYE collet chuck achieves more than twice the holding force compared to standard ER tool holders. In addition, the reinforced chuck body contributes to significantly higher radial rigidity. HAWK EYE can only clamp tool shanks with nominal collet diameter

Scope of delivery:

- Round clamping nut

Fine balanced:

G 2.5 at 25000 $^{min-1}$ or max. residual unbalance ≤ 1 gmm

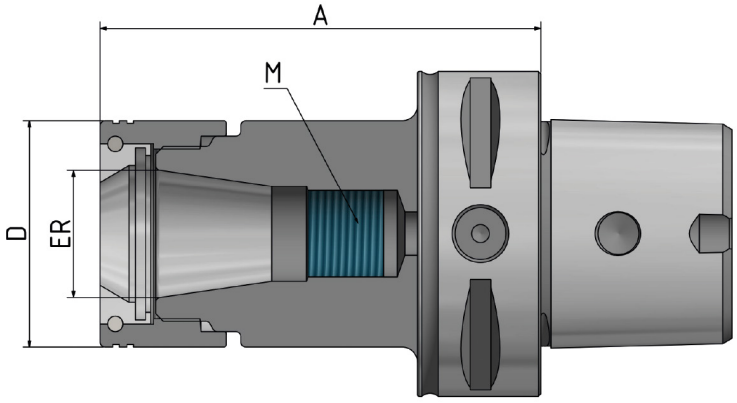

Order no.	C	ER	A	D	Clamping range	M	Version
ZT306332-31	6	16	100	34	1 - 10	M11 x 1	Long
ZT306332-32	6	25	100	44	1 - 16	M18 x 1,5	Long
ZT306332-33	6	32	100	52	2 - 20	M24 x 1,5	Long

Accessories

ER Collets, repeatable accuracy 2 µ and 5 µ

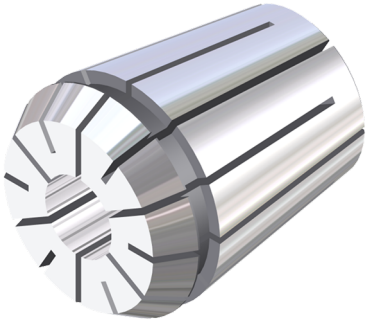

- High precision design with 2 µ or 5 µ concentricity and repeatability!
- All longitudinal edges deburred and additionally rounded. This protects the inner taper of the chuck and ensures consistently high concentricity!
- Increased holding forces and stiffness due to super finish!

You can find the whole product range of 2 µ and 5 µ collets as well as other versions in our current Technical Description of Tooling Solutions!

ER Roller wrench HAWK EYE® one-piece

Order no.	ER	D
ZT163-12	16	34
ZT163-13	20	38
ZT163-14	25	44
ZT163-15	32	52
ZT163-16	40	62

ER Roller wrench Attachment HAWK EYE® Square Shank

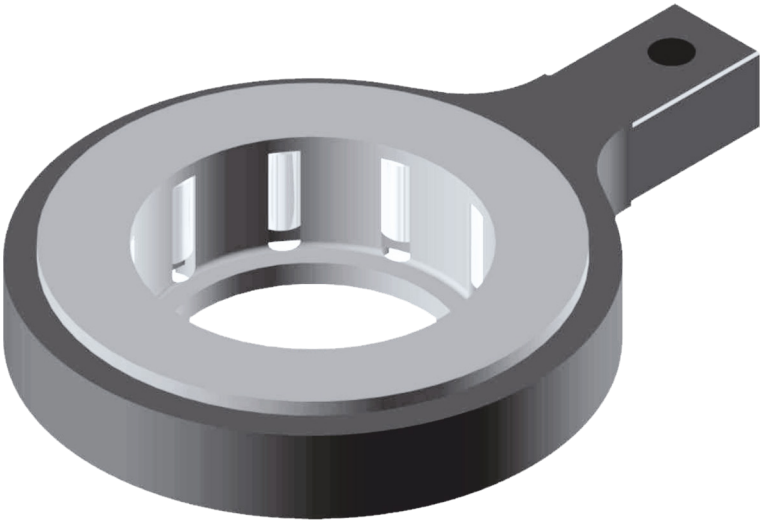

Order no.	ER	D	VK
ZT163-42	16	34	9 x 12
ZT163-43	20	38	9 x 18
ZT163-44	25	44	14 x 18
ZT163-45	32	52	14 x 18
ZT163-46	40	62	14 x 18

Torque wrench for roller wrench attachment

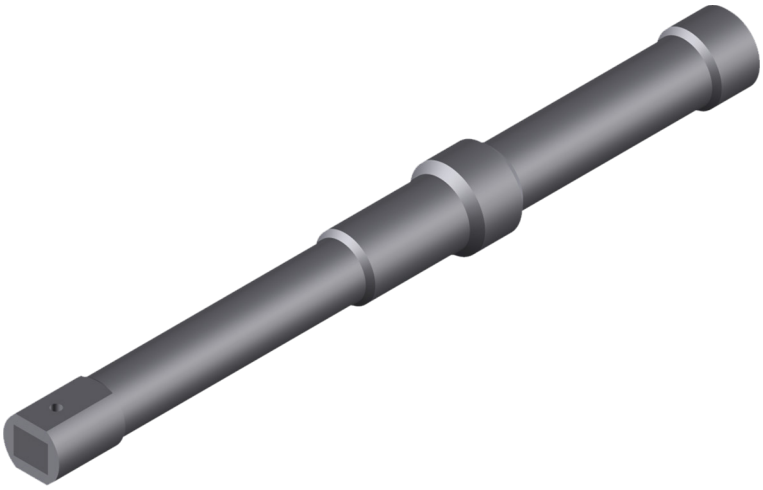

Order no.	VK
ZT163-83	9 x 12
ZT163-85	14 x 18

HAWK EYE® clamping nuts with ball bearings

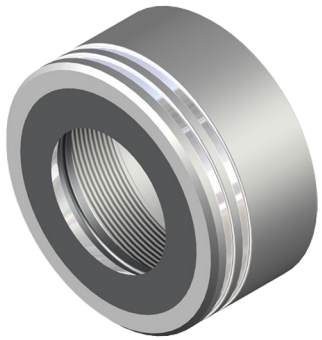

Order no.	ER	D
ZT137-02R	16	34
ZT137-03R	20	38
ZT137-04R	25	44
ZT137-05R	32	52
ZT137-06R	40	62

Clamping nuts HAWK EYE® one-piece

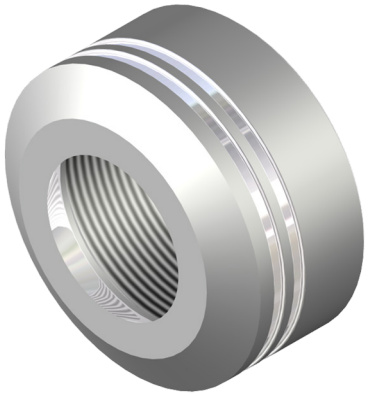

Order no.	ER	D
ZT137-42R	16	34
ZT137-44R	25	44
ZT137-45R	32	52
ZT137-46R	40	62
ZT137-01M*	11	16
ZT137-02M*	16	24

*Clamping nut HAWK EYE® - ER «Mini»

TITANIUM

ER Collet System TITANIUM – secuRgrip®

In HPC milling processes such as iMachining or full-slot milling, even the highest holding forces are often insufficient to prevent tool pull-out. This results in additional costs for amendent or deficient product. To avoid this, we have a powerful solution: the combination of Schüssler's ER-collet chuck HAWK EYE® with our ER-collet system TITANIUM - secuRgrip® for highest concentricity, perfect damping and 100 % protection against tool pull-out.

Your benefits at a glance

- Optimization of process times (metal removal rate)
- Safety and precision even with materials that are difficult to machine or with high-quality and time-intensive workpieces
- Improvement of tool life
- Reduction of tool breakage
- Longer lifetime of machine spindle
- Ultimate tool pull-out protection

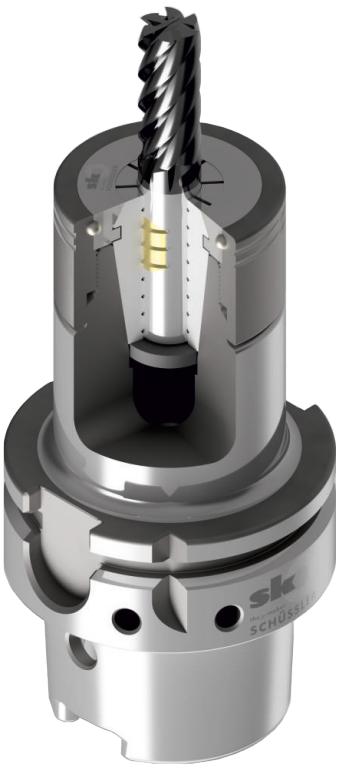

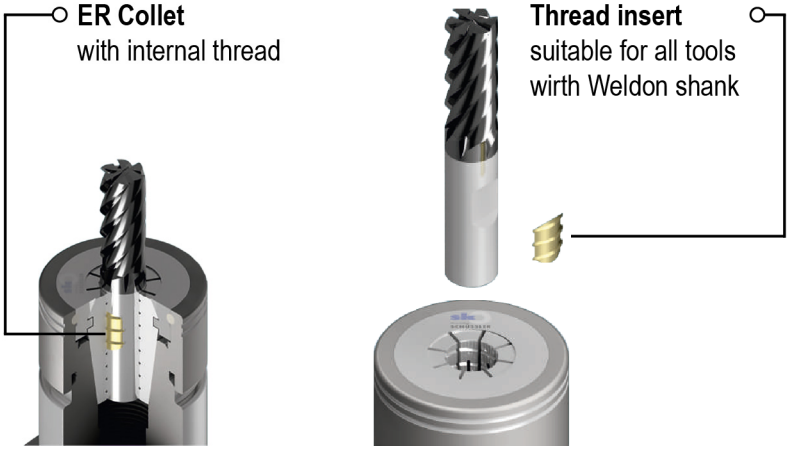

Order no. ER Collet secuRgrip®	ER	D	Order no. Thread insert secuRgrip®	D
ZT125-410	32	10	ZT136-10	10
ZT125-412	32	12	ZT136-12	12
ZT125-416	32	16	ZT136-16	16
ZT125-516	40	16	ZT136-16	16
ZT125-520	40	20	ZT136-20	20
ZT125-525	40	25	ZT136-25	25

The HPC Precision ER Collet Chuck HAWK EYE® in combination with the ER collet system TITANIUM – a 100 % secure connection!

Recommended clamping torque

Recommended clamping torque for HPC Precision ER Collet Chuck HAWK EYE®

Diameter	ER 11 «Mini»	ER 16 «Mini»	ER 16	ER 20	ER 25	ER 32	ER 40
1,00	6 Nm	8 Nm	10 Nm	15 Nm	25 Nm		
1,50	6 Nm	8 Nm	10 Nm	15 Nm	25 Nm		
2,00	8 Nm	10 Nm	15 Nm	20 Nm	25 Nm	35 Nm	
2,50	8 Nm	10 Nm	15 Nm	20 Nm	25 Nm	35 Nm	
3,00	10 Nm	15 Nm	20 Nm	25 Nm	25 Nm	35 Nm	60 Nm
3,50	10 Nm	15 Nm	20 Nm	25 Nm	35 Nm	50 Nm	60 Nm
4,00	10 Nm	20 Nm	25 Nm	30 Nm	35 Nm	50 Nm	60 Nm
4,50	10 Nm	20 Nm	25 Nm	30 Nm	35 Nm	50 Nm	60 Nm
5,00	10 Nm	20 Nm	25 Nm	30 Nm	35 Nm	60 Nm	70 Nm
5,50	10 Nm	20 Nm	25 Nm	30 Nm	35 Nm	60 Nm	70 Nm
6,00	10 Nm	30 Nm	40 Nm	50 Nm	55 Nm	60 Nm	70 Nm
6,50	10 Nm	30 Nm	40 Nm	50 Nm	55 Nm	60 Nm	70 Nm
7,00	10 Nm	30 Nm	40 Nm	50 Nm	60 Nm	90 Nm	100 Nm
8,00		30 Nm	40 Nm	50 Nm	60 Nm	90 Nm	100 Nm
9,00		30 Nm	50 Nm	70 Nm	60 Nm	90 Nm	100 Nm
10,00		30 Nm	50 Nm	70 Nm		100 Nm	110 Nm
11,00				70 Nm		100 Nm	110 Nm
12,00				70 Nm		100 Nm	120 Nm
13,00				70 Nm		100 Nm	120 Nm
14,00						100 Nm	120 Nm
15,00						110 Nm	130 Nm
16,00						110 Nm	130 Nm
17,00						140 Nm	170 Nm
18,00						140 Nm	170 Nm
19,00						140 Nm	170 Nm
20,00						140 Nm	170 Nm
21,00							190 Nm
22,00							190 Nm
23,00							190 Nm
24,00							190 Nm
25,00							190 Nm
26,00							190 Nm

ZOLLER

Solutions

More speed, higher quality, reliable processes –
with ZOLLER you get more out of your production process.
We combine hardware, software and service
to create optimum system solutions for presetting,
measuring, inspecting and managing tools.

Presetting & Measuring
Tool Management
Inspection & Measuring
Automation

Everything from a single source.
Everything for your success.
Everything with ZOLLER Solutions.

ZOLLER
expect great measures

Headquarters in Pleidelsheim
E. Zoller GmbH & Co. KG
Tool presetter and measuring machines
Gottlieb-Daimler-Straße 19 | D-74385 Pleidelsheim
Phone: +49 7144 8970-0 | Fax: +49 7144 8060-807
post@zoller.info | www.zoller.info